# BG 160
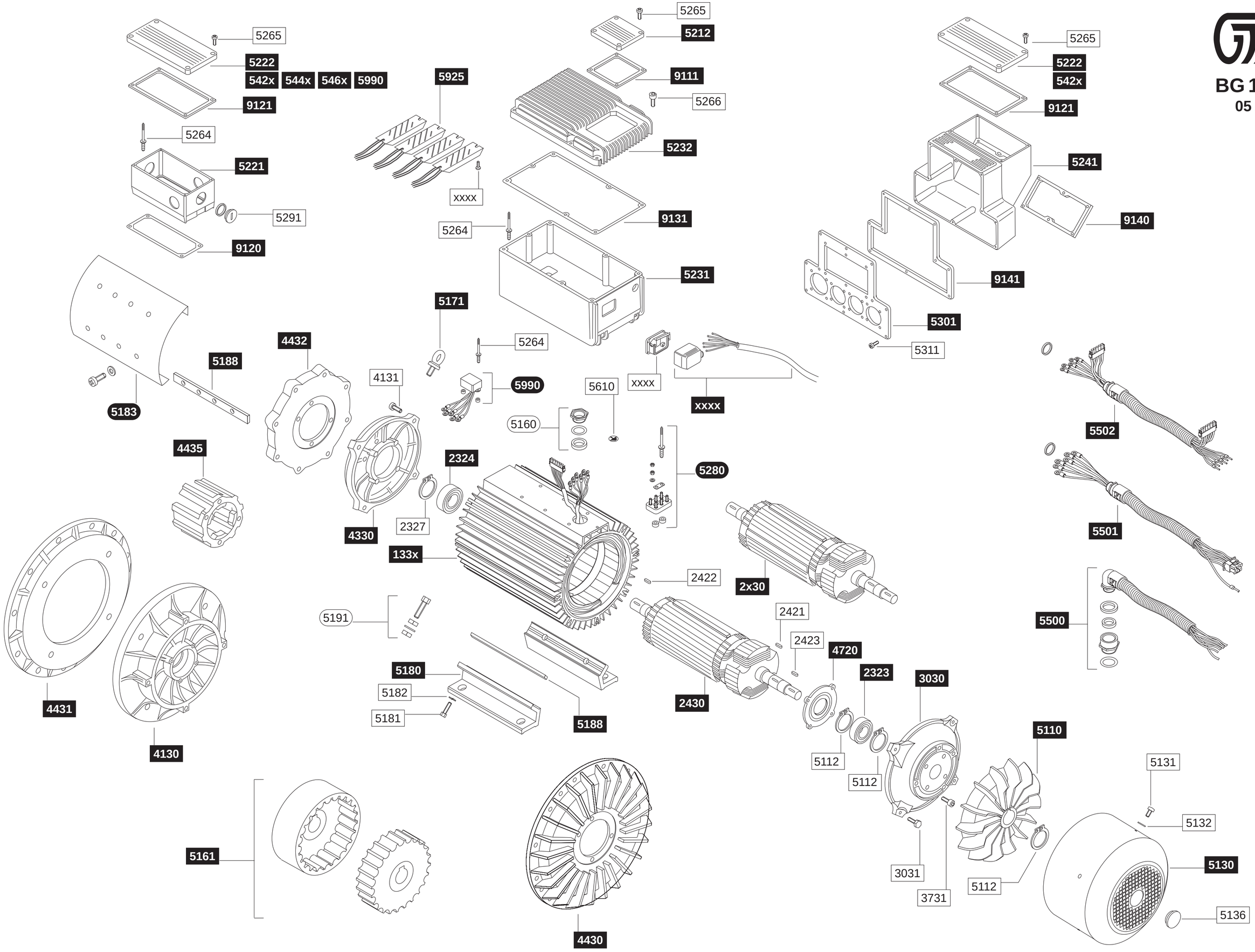
**05 / 2000**